| | | |
|---|---|---|
| | NATIONAL FOOD PRODUCTS CO. | CODE: PLA/QAD/DS -3 |
| | QUALITY SYSTEM FORMS | ISSUE DATE: 10-June-2017 |
| | Product Data Sheet Thermoforming | ISSUE NO.: 4 |
| | **Code** UFP50130BLK-03 | PAGE: 1/1 |

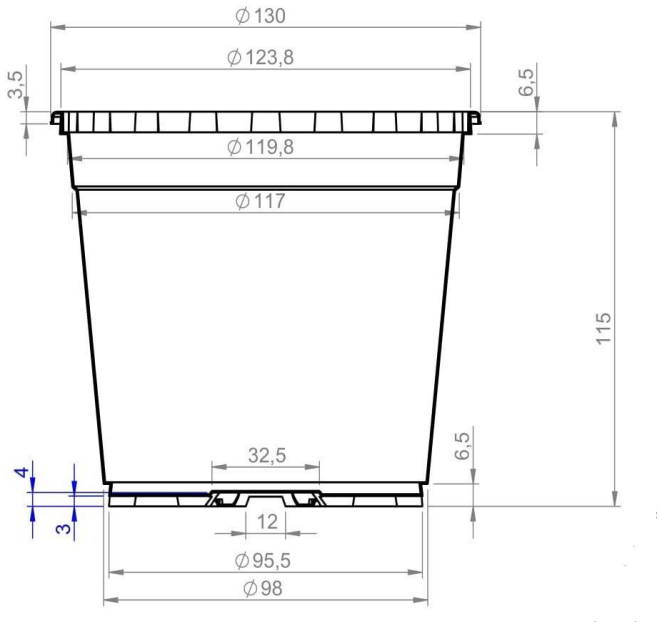


| | |
|---|---|
| Item | PP FLOWER POT |
| Material: | Polypropylene |
| Color | Black |
| Unit Weight: | 11.0 g ± 0.4g |
| Rim Dia | 130 mm |

| | |
|---|---|
| Quantity | 500 Pcs. /Carton |
| Carton Size | 67 X47.5 X 27 cm |
| Poly Bag | yes |

Dimensions in “mm” (Not to scale)

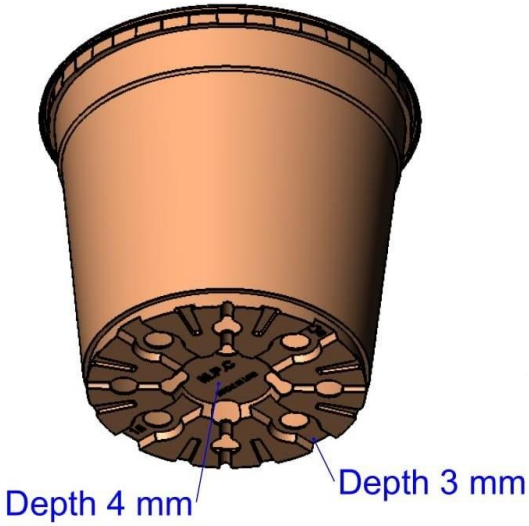


**Issued by:** **QC MPC** **Date:** **01.06.22**